DocuSign Envelope ID: 3C36CE9B-D647-4AA3-BA8A-30B08DC11441

PROJECT REFERENCE NO.	SHEET NO.
EB-5923	2C-1

STATE OF
NORTH CAROLINA
DEPT. OF TRANSPORTATION
DIVISION OF HIGHWAYS
RALEIGH, N.C.

ENGLISH DETAIL DRAWING FOR
REINFORCED CONCRETE ENDWALL
FOR DOUBLE & TRIPLE 60" PIPE 45° OR 135° SKEW

SHEET 1 OF 1
838D32

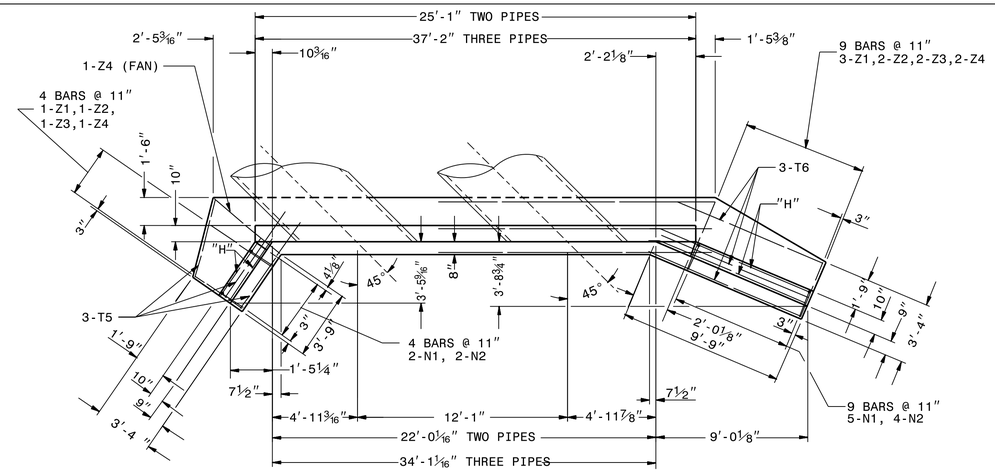

PLAN

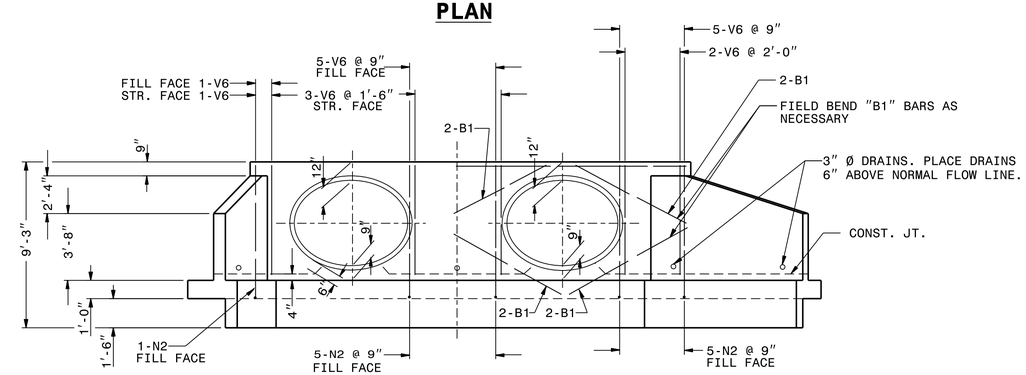

ELEVATION

SEE STD. NO. 838.45 FOR GENERAL NOTES.

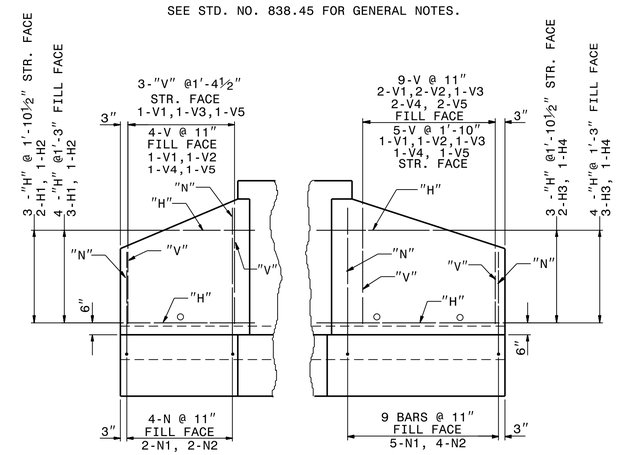

WING ELEVATION

BILL OF MATERIAL FOR ENDWALLS						
REINF. STEEL			2 - PIPES		3 - PIPES	
BAR	SIZE	LENGTH	NO.	WEIGHT	NO.	WEIGHT
Z1	#4	3'-5"	4	9	4	9
Z2	#4	3'-9"	3	8	3	8
Z3	#4	4'-1"	3	13	3	13
Z4	#5	4'-4"	4	18	4	18
N1	#4	3'-5"	7	16	7	16
N2	#5	3'-11"	17	69	22	90
V1	#4	3'-3"	5	11	5	11
V2	#4	3'-9"	4	10	4	10
V3	#5	4'-3"	3	9	3	9
V4	#4	4'-7"	4	12	4	12
V5	#4	5'-2"	5	17	5	17
V6	#4	6'-3"	17	71	25	104
H1	#4	4'-5"	5	15	5	15
H2	#4	3'-6"	2	5	2	5
H3	#4	10'-10"	5	36	5	36
H4	#4	8'-5"	2	11	2	11
G2	#7	24'-9"	2	101	-	-
G3	#7	19'-7"	-	-	4	160
T1	#4	2'-6"	100	167	148	247
T3	#4	28'-7"	6	115	-	-
T4	#4	21'-0"	-	-	12	168
T5	#4	4'-5"	3	9	3	9
T6	#6	8'-9"	3	39	3	39
B1	#4	5'-6"	16	59	24	88
REINF. STEEL LBS.				820		1095
CONC/C.M. CU. YDS.			11.3		14.7	
CONC/R.C. CU. YDS.			10.5		13.6	

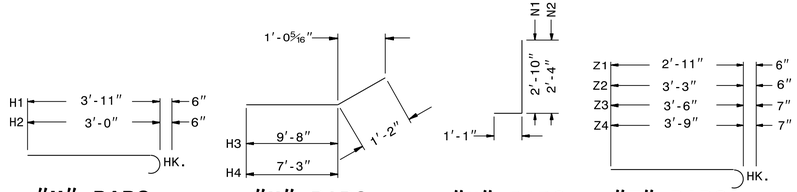

"H" BARS **"H" BARS** **"N" BARS** **"Z" BARS**

"H", "N", & "Z" BARS DIMENSIONS ARE OUT TO OUT.

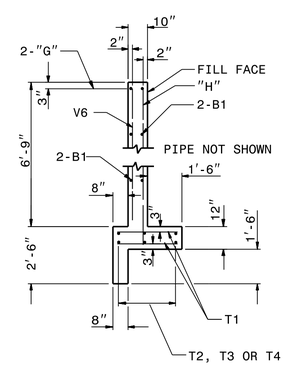

SECTION - BB

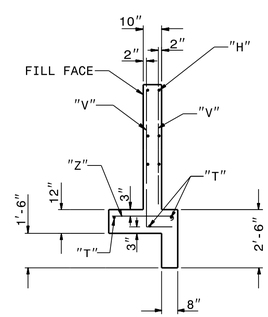

SECTION - AA

STATE OF
NORTH CAROLINA
DEPT. OF TRANSPORTATION
DIVISION OF HIGHWAYS
RALEIGH, N.C.

ENGLISH DETAIL DRAWING FOR
REINFORCED CONCRETE ENDWALL
FOR DOUBLE & TRIPLE 60" PIPE 45° OR 135° SKEW

SHEET 1 OF 1
838D32

NORTH CAROLINA PROFESSIONAL SEAL 022966 ENGINEER Joel S. Howerton

DOCUMENT NOT CONSIDERED FINAL
UNLESS ALL SIGNATURES COMPLETED

CONTRACT STANDARDS AND DEVELOPMENT UNIT
Office 919-707-6950 FAX 919-250-4119

DETAIL OF REINFORCED CONCRETE ENDWALL FOR DOUBLE & TRIPLE 60" DIAMETER PIPE - 45° SKEW

ORIGINAL BY: _____ DATE: _____
MODIFIED BY: rnbritt DATE: 06-30-10
CHECKED BY: _____ DATE: _____
FILE SPEC.: details/nbritt/english/hydro/60endwall,45sk.dgn

24-SEP-2019 10:42
S:\Contracts\Contracts\Special Details\ericward\usr\ds9\stand\838d32.dgn
jhowerton AT CSD-292595