PROJECT TYPICAL DETAILS

PROJECT REFERENCE NO.	SHEET NO.
EB-5923	UC-3A
DESIGNED BY: RJLK	
DRAWN BY: RJLK	
CHECKED BY: RWB	
APPROVED BY: JBV	
REVISED:	
NORTH CAROLINA DEPARTMENT OF TRANSPORTATION	
UTILITIES ENGINEERING SEC. PHONE:(919)707-6690 FAX:(919)250-4151	UTILITY CONSTRUCTION PLANS ONLY

NORTH CAROLINA PROFESSIONAL SEAL 022599 ENGINEER JAMES B. VOSS
DocuSigned by: James B. Voss 3/29/2022
140FD6D0376E241F...

UTILITY CONSTRUCTION

DOCUMENT NOT CONSIDERED FINAL UNLESS ALL SIGNATURES COMPLETED

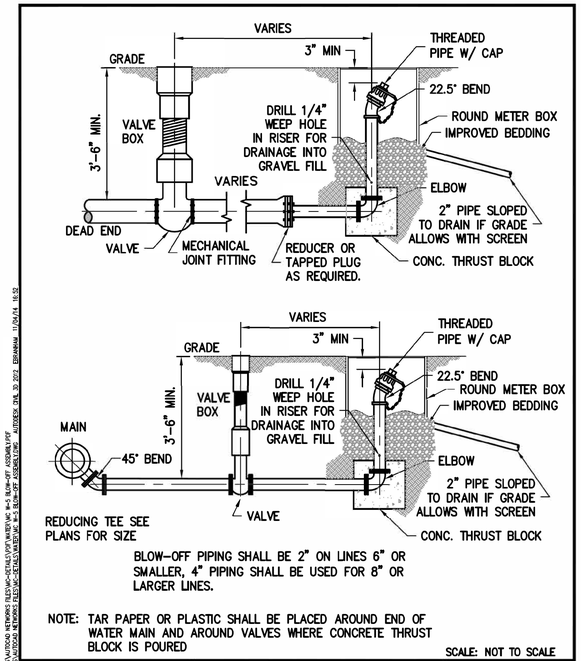

BLOW-OFF PIPING SHALL BE 2" ON LINES 6" OR SMALLER, 4" PIPING SHALL BE USED FOR 8" OR LARGER LINES.

NOTE: TAR PAPER OR PLASTIC SHALL BE PLACED AROUND END OF WATER MAIN AND AROUND VALVES WHERE CONCRETE THRUST BLOCK IS POURED

SCALE: NOT TO SCALE

Mattern & Craig ENGINEERS • SURVEYORS | BLOW-OFF DETAIL (STANDARD) | DETAIL NUMBER MC W-5 | Date: NOV 2014 | Revision: ____

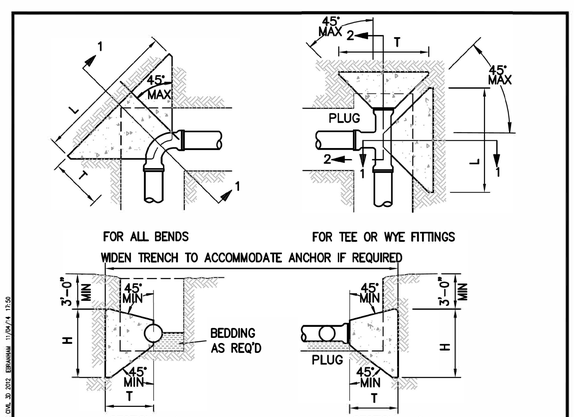

PIPE SIZE	DEGREE OF BEND	BEND DIMENSIONS (FEET) L	H	T	VOL. CU.YD.	TEE AND PLUGS (FEET) L	H	T	VOL. CU.YD.
4" & 6"	90	2.50	2.50	1.01	0.24	2.00	2.25	2.50	0.15
	45	2.00	2.25	2.60	0.15				
	22 1/2	1.50	2.00	2.52	0.10				
	11 1/4	1.50	2.00	2.50	0.10				
8"	90	3.66	3.16	1.37	0.48	3.16	2.91	2.66	0.32
	45	2.66	2.91	3.31	0.32				
	22 1/2	1.66	2.16	2.49	0.13				
	11 1/4	1.66	2.16	2.67	0.13				
10" & 12"	90	4.83	3.83	1.42	0.82	3.83	4.00	2.83	0.52
	45	3.33	3.58	2.92	0.43				
	22 1/2	2.33	2.58	2.88	0.24				
	11 1/4	1.83	2.33	2.84	0.18				
14"	90	5.83	4.00	1.63	1.10	4.00	4.5	3.00	0.70
	45	4.00	4.00	3.11	0.65				
	22 1/2	3.16	4.00	3.60	0.32				
	11 1/4	2.00	3.33	3.67	0.20				

1. THRUST BLOCKS ARE REQUIRED WHENEVER THE PIPELINE: CHANGES DIRECTION, CHANGES SIZE, DEAD ENDS AND AT VALVES.
2. USE 3000 P.S.I. CONCRETE
3. NO CONCRETE SHALL BE POURED ON ANY PART OF THE JOINT.
4. TAR PAPER OR PLASTIC SHALL BE PLACED AROUND END OF WATER MAIN AND AROUND VALVES WHERE CONCRETE ANCHOR BLOCK IS POURED.

SCALE: NOT TO SCALE

Mattern & Craig ENGINEERS • SURVEYORS | THRUST BLOCK | DETAIL NUMBER MC W-7A | Date: NOV 2014 | Revision: ____

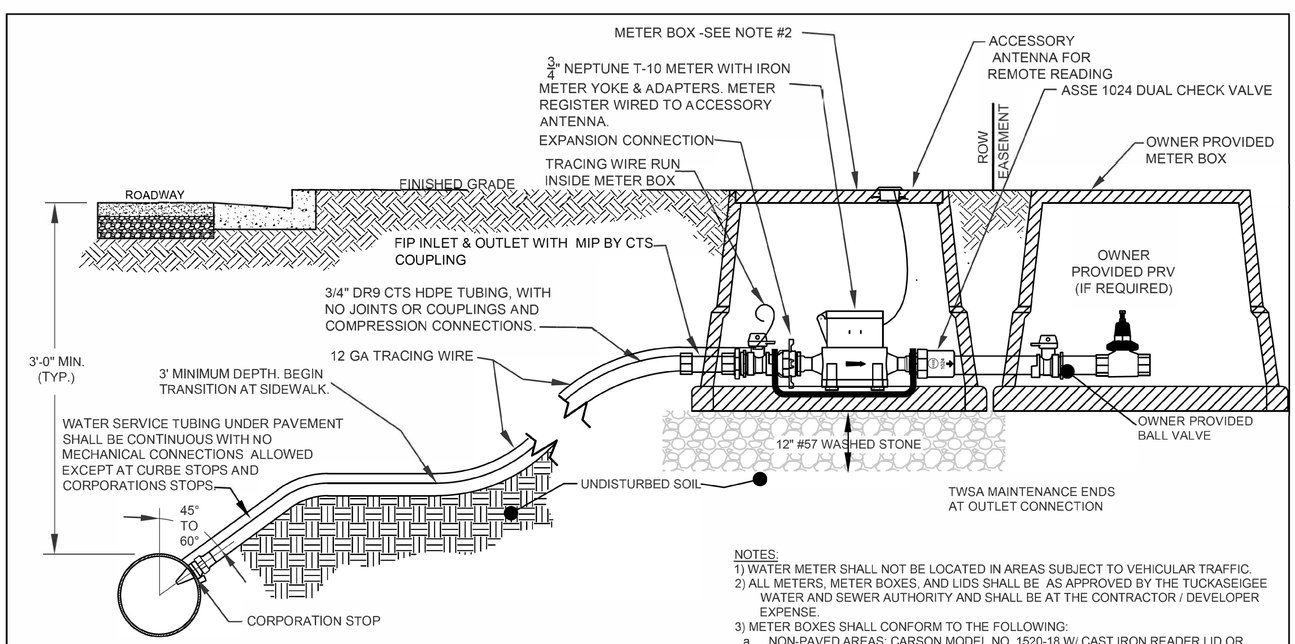

NOTES:
1) WATER METER SHALL NOT BE LOCATED IN AREAS SUBJECT TO VEHICULAR TRAFFIC.
2) ALL METERS, METER BOXES, AND LIDS SHALL BE AS APPROVED BY THE TUCKASEIGEE WATER AND SEWER AUTHORITY AND SHALL BE AT THE CONTRACTOR / DEVELOPER EXPENSE.
3) METER BOXES SHALL CONFORM TO THE FOLLOWING:
   a. NON-PAVED AREAS: CARSON MODEL NO. 1520-18 W/ CAST IRON READER LID OR EQUAL
   b. PAVED AREAS: PRE-APPROVED H-20 TRAFFIC RATED METER BOX, MINIMUM 15"X20" INTERIOR DIMENSION.
4) ALL SERVICE LINES, VALVES AND FITTINGS SHALL COMPLY WITH AWWA C800.
5) FOR NON-RESIDENTIAL APPLICATIONS THAT REQUIRE AN ABOVE-GROUND BACKFLOW PREVENTER, THE DUAL CHECK ASSEMBLY MAY BE OMITTED.
6) ALL BRASS OF 85-5-5-5 RED BRASS, AWWA C800, ASTM B62.
7) ONE 2" OR 6" GRADE ADJUSTER MAY BE UTILIZED WHEN NEEDED TO MEET FINAL GRADE (NO GRADE ADJUSTERS MAY BE USED ON NEW CONSTRUCTION PROJECTS). GRADE ADJUSTER AND BOX SHALL BE BY THE SAME MANUFACTURER.
8) 3/4" BALL VALVE (REQUIRED) AND PRESSURE REDUCING VALVE (IF REQUIRED) SHALL BE INSTALLED BETWEEN METER BOX AND STRUCTURE ENTRY POINT.

5/8"X3/4", 3/4", AND 1" WATER SERVICE LATERAL
N.T.S.

TUCKASEIGEE Water & Sewer Authority
SERVING JACKSON COUNTY
1246 W. MAIN ST. SYLVA, NC 28779

811 Know what's below. Call before you dig.

SHEET NO. 1 OF 1	DWG. NO. W.2	DWG. BY: W.A.S.
	DATE: JUNE 27, 2019	APPROVED BY: D.E.H.

NO.	DATE	REVISION

W2-WLAT.dwg